Introduction to Digital Systems

Part III (Sequential Components)

2025/2026

Sequential Logic Fundamentals and Basic Circuits

Arnaldo Oliveira, Augusto Silva, Iouliia Skliarova, Adão Silva

Lecture Contents

- Sequential logic circuits fundamentals
  - Motivation and concepts
- Sequential logic basic circuits (memory elements built with ordinary gates and feedback loops)
  - S-R Latch
  - D Latch
  - D Flip-flop

Figures and most content extracted from: John F. Wakerly, "Digital Design – Principles and Practices", 4 ed., Pearson – Prentice Hall, 2006 (chapter 7). Reading chapter 7 (4th ed.) or chapter 10 (5th ed.) is highly recommended.

Sequential Circuit Example

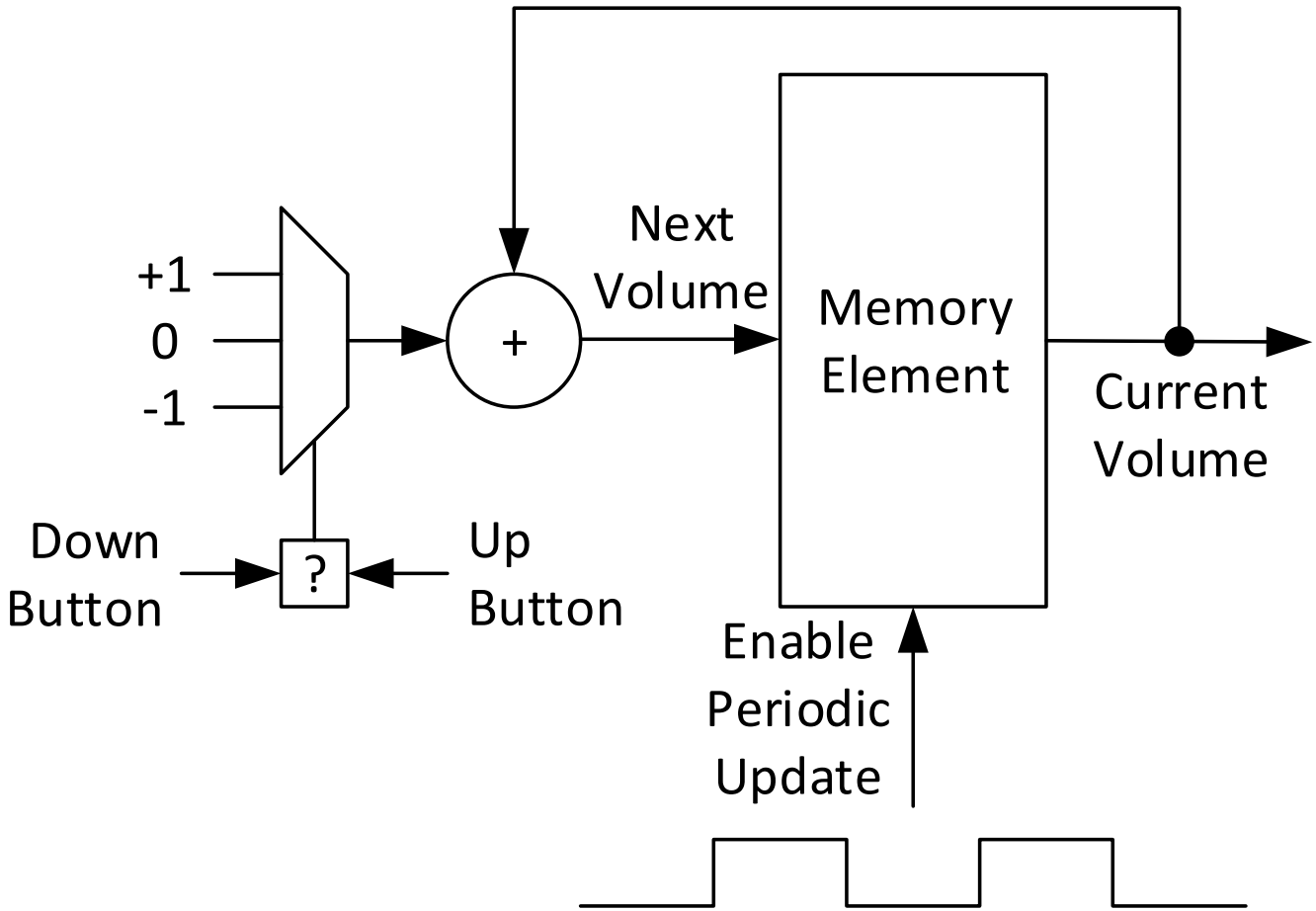

Introduction

- **Combinational** logic circuit
  - Is one whose outputs depend only on its current inputs
- **Sequential** logic circuit
  - Is one whose outputs depend not only on its current inputs, but also on the past sequence of inputs, possibly far back in time
- **State** of a sequential circuit
  - Is a collection of state variables whose values at any one time contain all the information about the past, necessary to account for the circuit's future behavior

- N-bit state variable: 2^N maximum number of states

Clock Signals

- State changes of most sequential circuits occur at times specified by a free-running clock signal
- Active high / active low clock signals

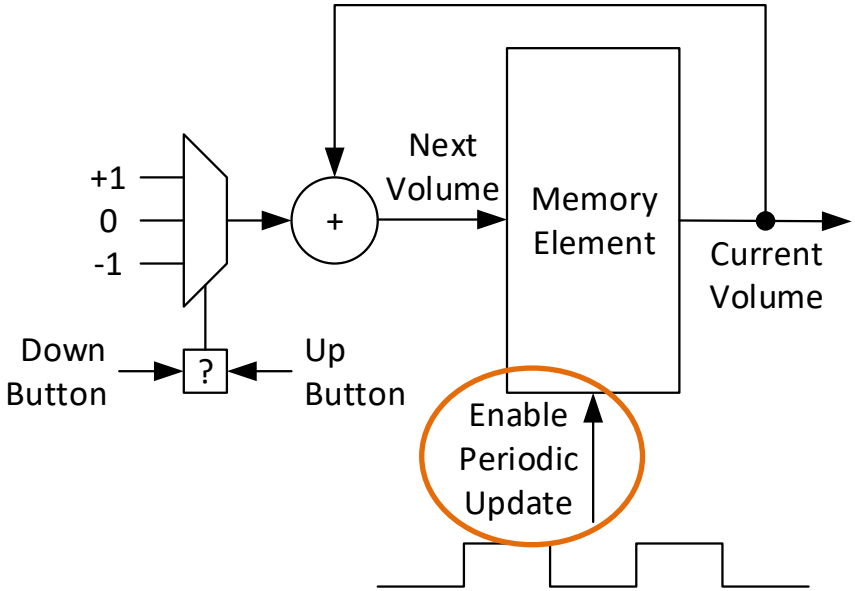

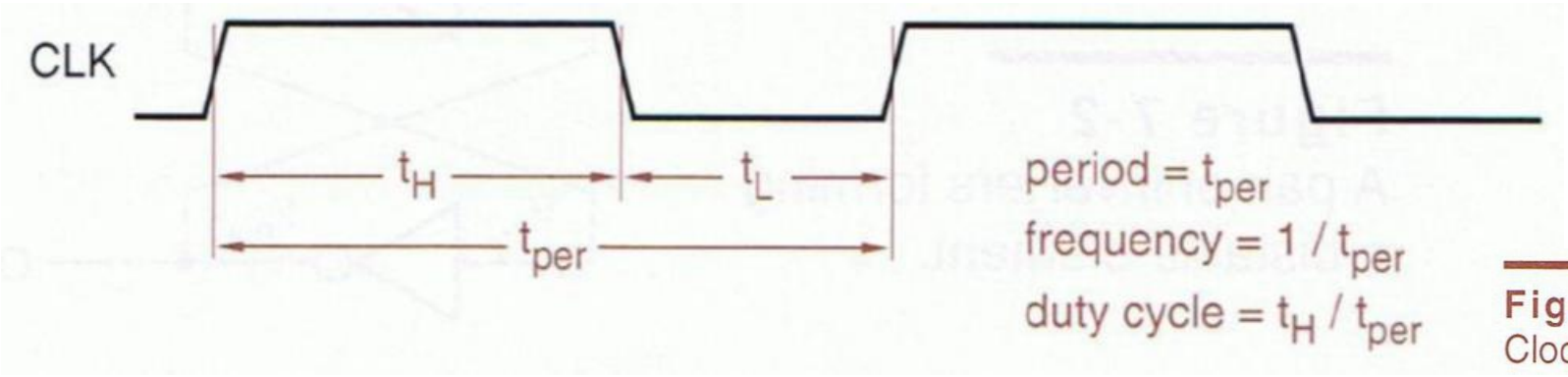

Figure 7-1
Clock signals:

Bistable Element (Basic Structure)

- The simplest sequential circuit consists of a pair of inverters forming a feedback loop. It has no inputs and two outputs, Q, Q_L
- No inputs and therefore no way of controlling or changing its state (random set at power up)
- Only illustrative but serves the basis for more complex and useful memory elements

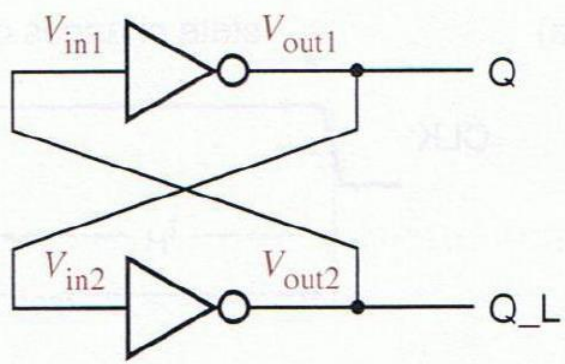

Figure 7-2
A pair of inverters forming a bistable element.

Bistable Element (Analog Analysis)

Figure 7-3
Transfer functions for inverters in a bistable feedback loop.

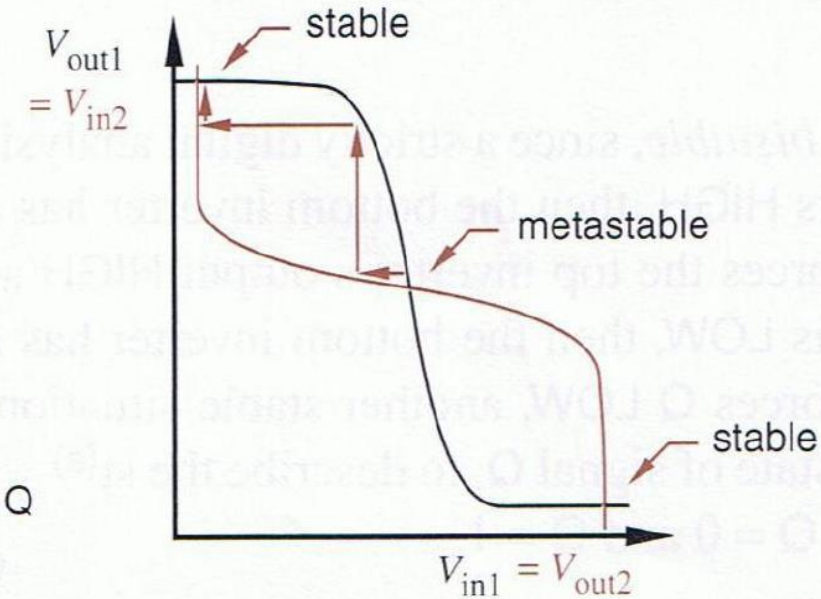

Transfer function:

$$V_{out1} = T(V_{in1})$$

$$V_{out2} = T(V_{in2})$$

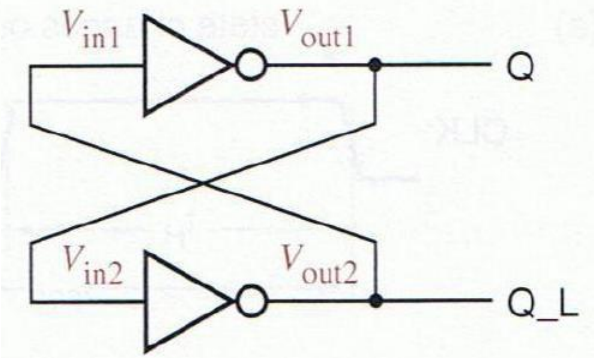

$$\begin{aligned} V_{in1} &= V_{out2} \\ &= T(V_{in2}) \\ &= T(V_{out1}) \\ &= T(T(V_{in1})) \end{aligned}$$

3 equilibrium points: 2 stable and 1 metastable

Metastability

Figure 7-3
Transfer functions for inverters in a bistable feedback loop.

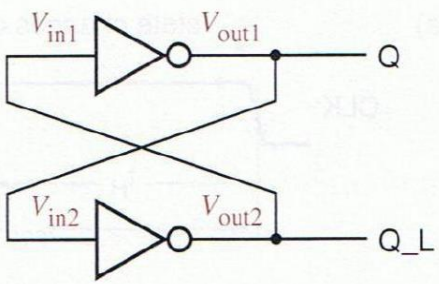

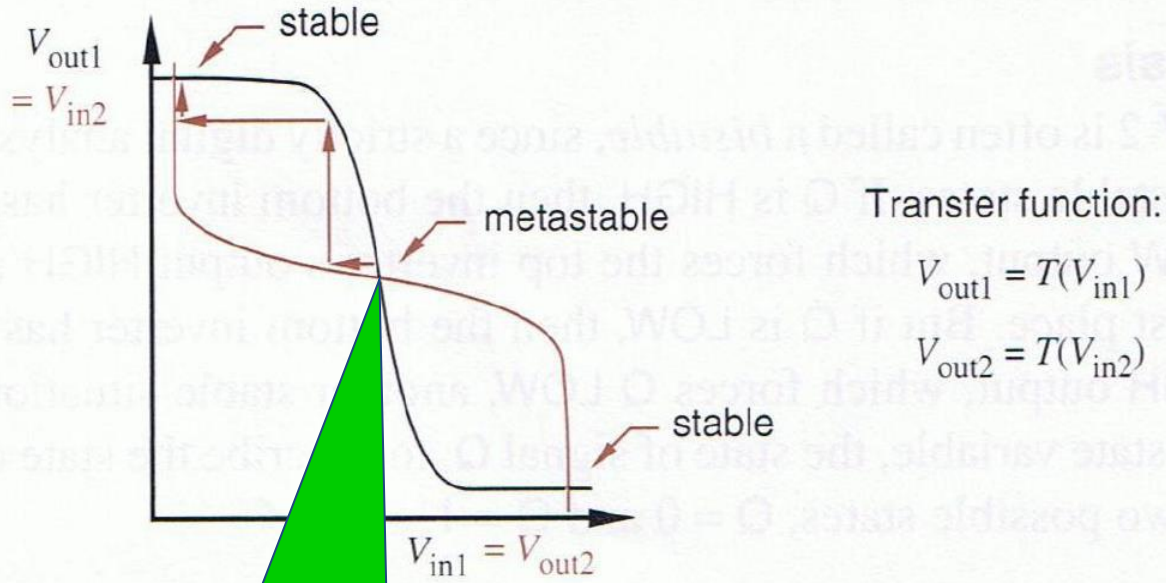

Occurs with Vout1 and Vout2 about half between a valid logic 1 and a valid logic 0 voltages -> Q and Q_L are not valid logic signals at this point

Metastability

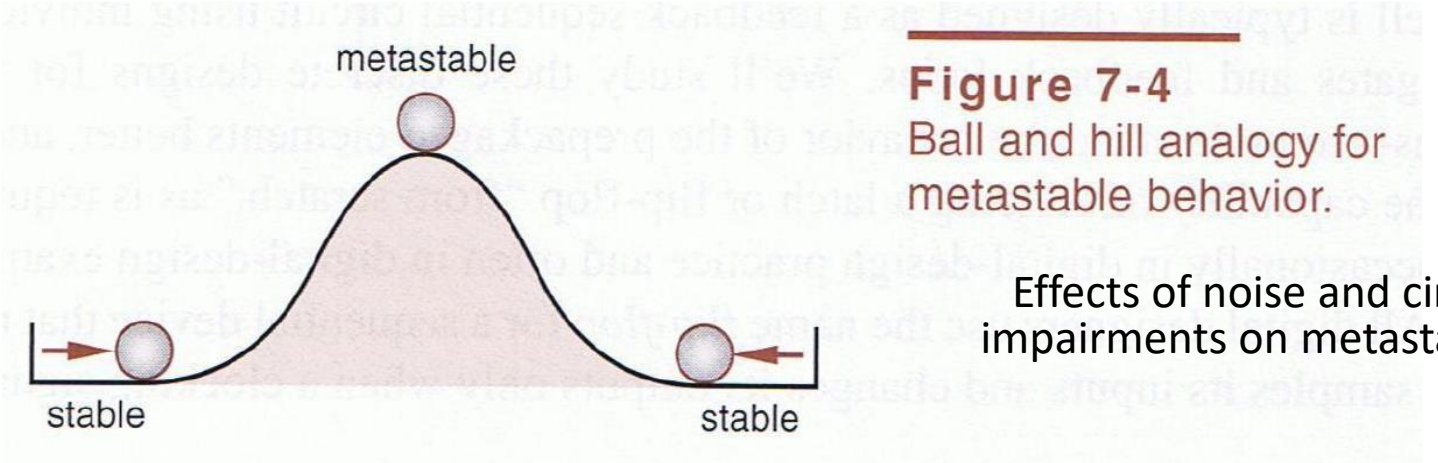

Figure 7-4
Ball and hill analogy for metastable behavior.

Effects of noise and circuit impairments on metastability

- Generally speaking: A metastable system is one that appears stable for a time but can shift to a more stable state when faced with small perturbations.
- Metastability occurs when the circuit is stuck in an undefined state (neither 0 nor 1) for a short period of time.
  - This happens, for example, when the input signal changes very close to the clock edge.
- If the simplest sequential circuits is susceptible to metastable behavior you can be sure that all sequential circuits are susceptible.

S-R Latch
(Structure and Function Table)

- Latch is the simplest memory element. This element has an english name that means “trancar" and, as the name suggests, it is capable of locking (saving) a logical value
- Latches and flip-flops (discussed later) are the basic building blocks of most sequential circuits.
- Let's start by S-R Latch

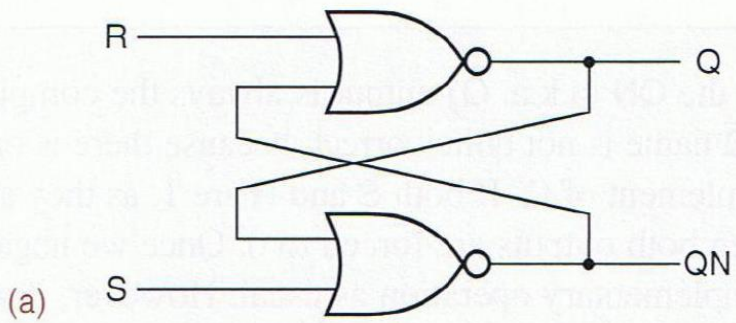

(b)

S	R	Q	QN
0	0	last Q	last QN
0	1	0	1
1	0	1	0
1	1	0	0

Figure 7-5
S-R latch: (a) circuit design using NOR gates; (b) function table.

S-R Latch (Symbol)

Figure 7-7
Symbols for an S-R latch:
(a) without bubble;
(b) preferred for bubble-to-bubble design;
(c) incorrect because of double negation.

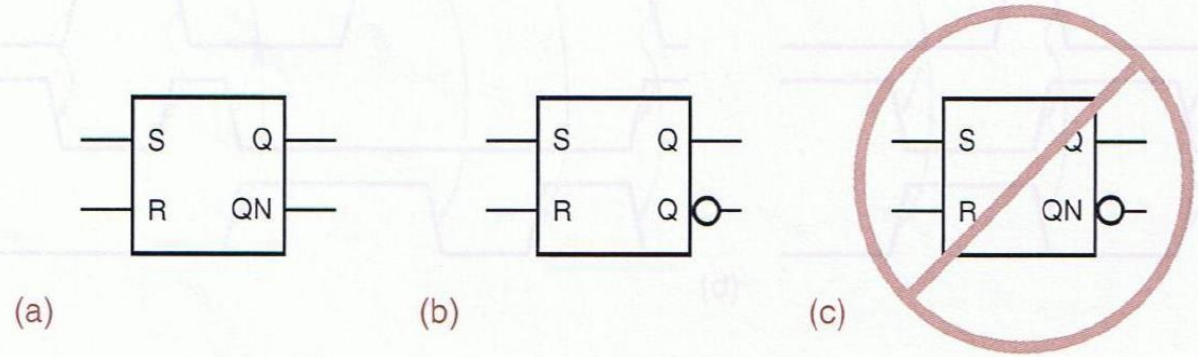

S-R Latch
(Characteristic Equation)

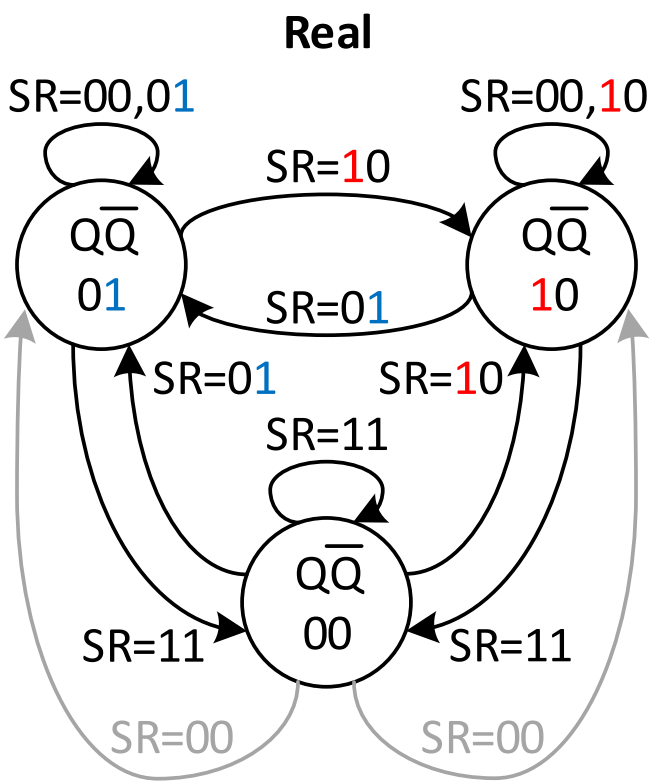

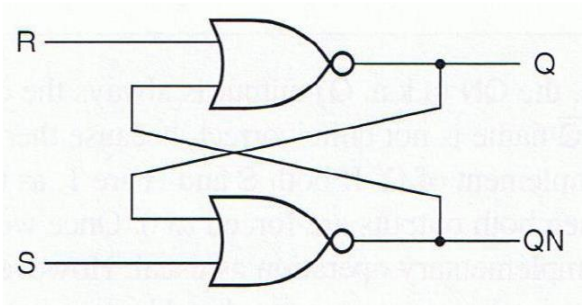

Q \ SR	00	01	11	10
0	0	0	X	1
1	1	0	X	1

$Q^{+} = S + Q.\overline{R}$

S-R Latch
(Operation/Timing Diagrams)

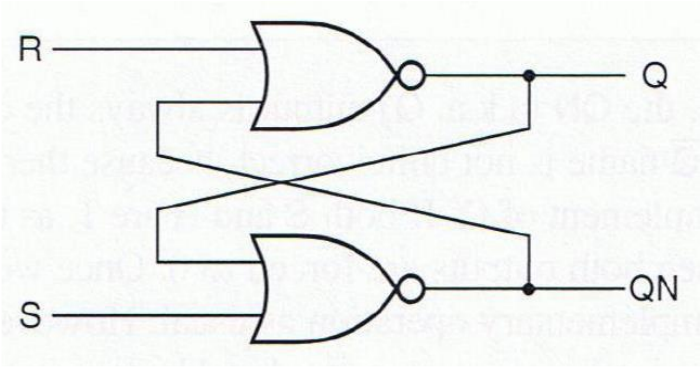

Figure 7-6 Typical operation of an S-R latch: (a) "normal" inputs; (b) S and R asserted simultaneously.

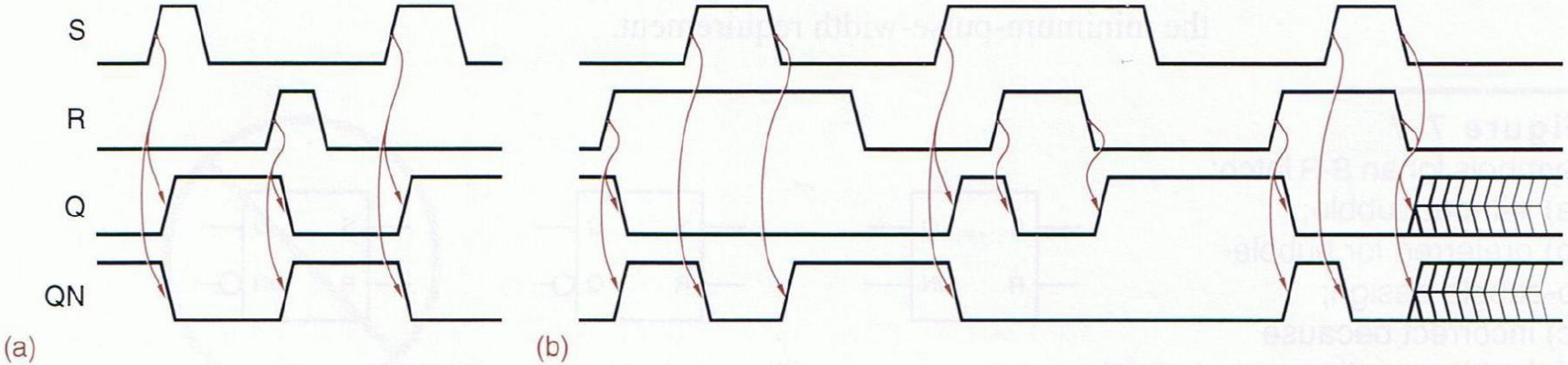

S-R Latch (Timing Parameters)

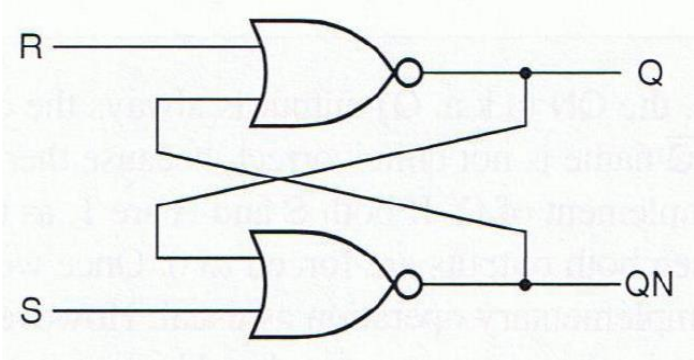

- t_{pLH} – propagation time LOW-to-HIGH
- t_{pHL} – propagation time HIGH-to-LOW
- $T_{pw(min)}$ – minimum pulse width

Non-determinism/metastability due to violation of $T_{pw(min)}$

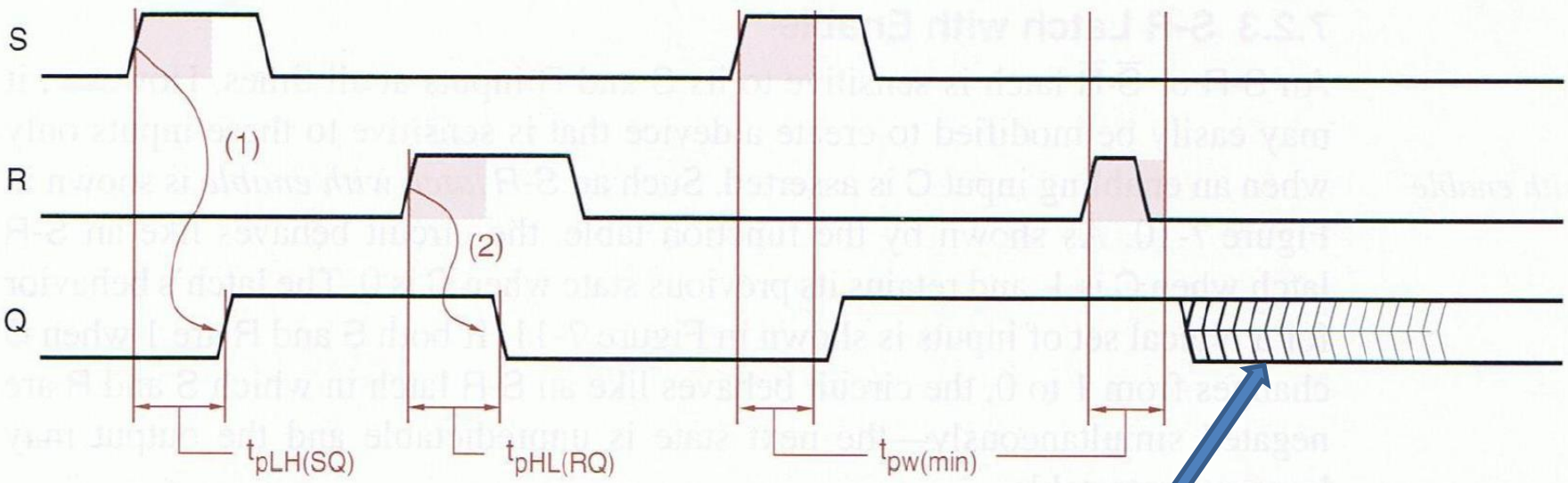

Figure 7-8 Timing parameters for an S-R latch.

The latch may go to metastable sate if a pulse shorter than the minimum with Tpw is applied to S or R

S-R Latch (with NAND Gates)

- A circuit with similar functionality can be constructed using negated "and" gates, i.e., NAND gates.
- Note that the circuit is now operating in negated logic

Figure 7-9 $\overline{S}$-$\overline{R}$ latch: (a) circuit design using NAND gates; (b) function table; (c) logic symbol.

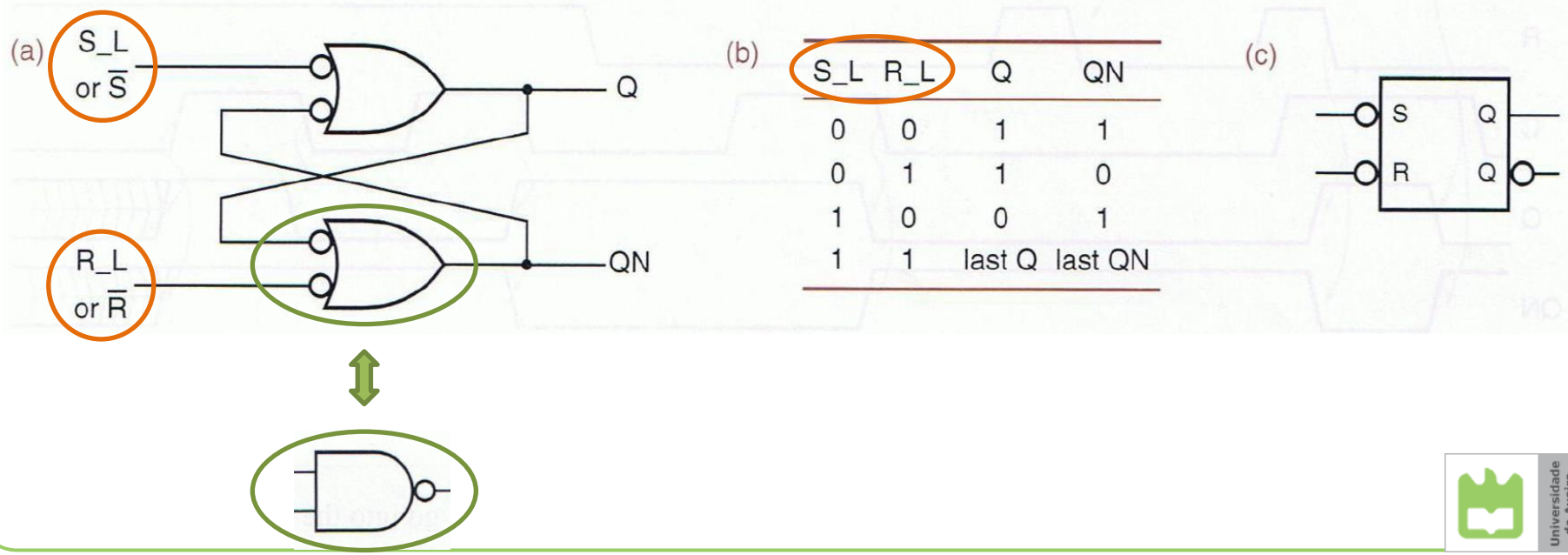

S_L	R_L	Q	QN
0	0	1	1
0	1	1	0
1	0	0	1
1	1	last Q	last QN

S-R Latch with Enable (C)

- One limitation of the Latch is that there is no control over its operation.
  - Any signal presented to its input can be saved in the memory element.
- A simple way to solve this problem is shown in the figure, where two additional NAND gates were introduced to enable the latch.

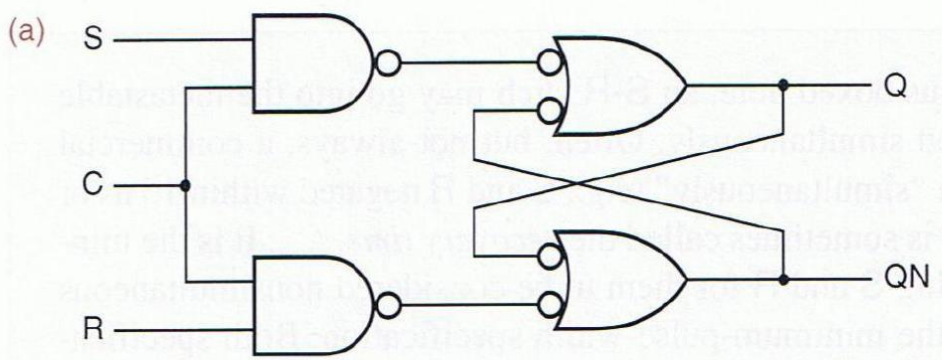

(b)

S	R	C	Q	QN
0	0	1	last Q	last QN
0	1	1	0	1
1	0	1	1	0
1	1	1	1	1
x	x	0	last Q	last QN

(c)

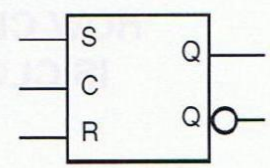

Figure 7-10 S-R latch with enable: (a) circuit using NAND gates; (b) function table; (c) logic symbol.

S-R Latch with Enable (Operation)

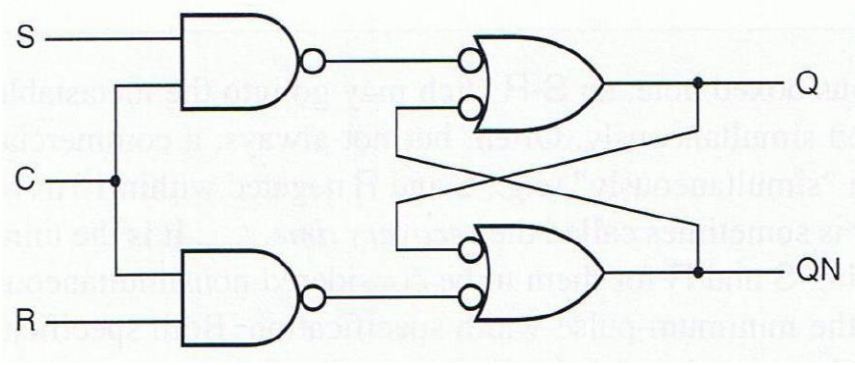

Figure 7-11 Typical operation of an S-R latch with enable.

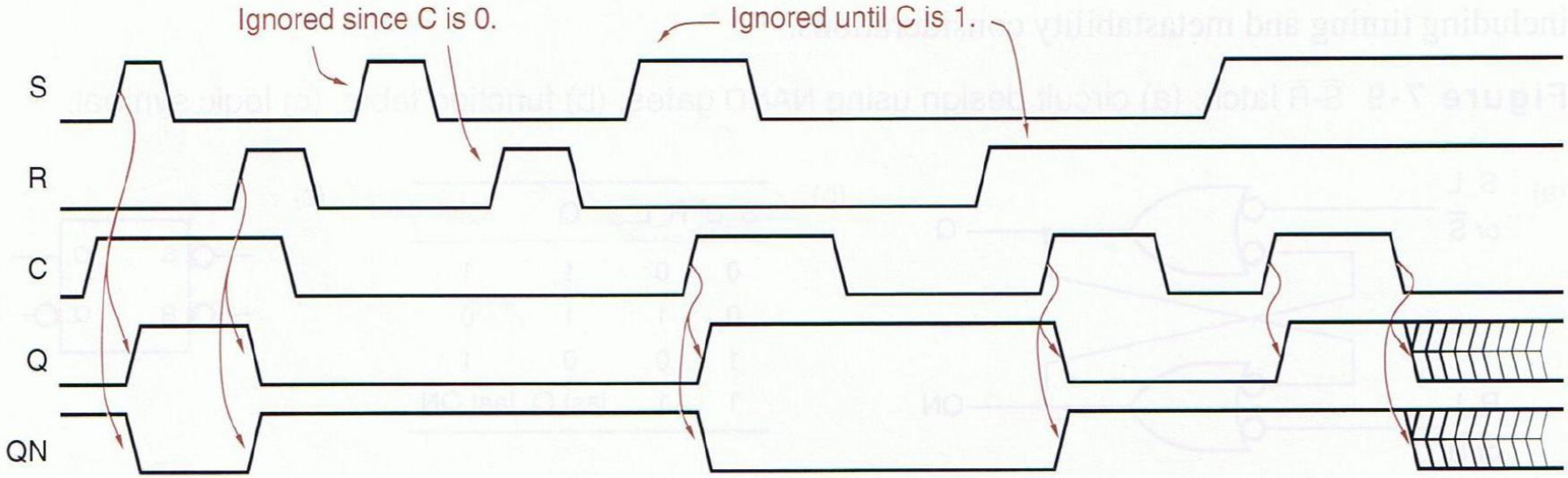

D Latch (Structure and Operation)

- In addition to the S-R latch, there are other memory elements with different inputs.
- In the figure we have a Latch of D type, built based on an S-R type Latch.
- The goal is to connect the latch directly to a data line and store the values originating from that line in the latch
  - The value available at the input is stored in the latch as long as the enable input is active.

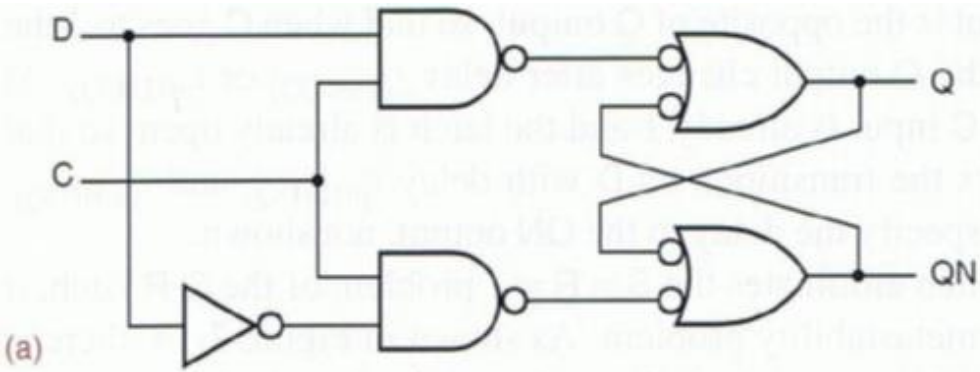

C	D	Q	QN
1	0	0	1
1	1	1	0
0	x	last Q	last QN

(b)

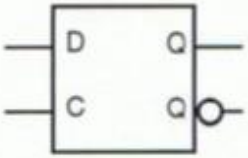

(c)

Figure 7-12 D latch: (a) circuit design using NAND gates; (b) function table; (c) logic symbol.

D Latch (Structure and Operation)

- Functional behavior of a D latch

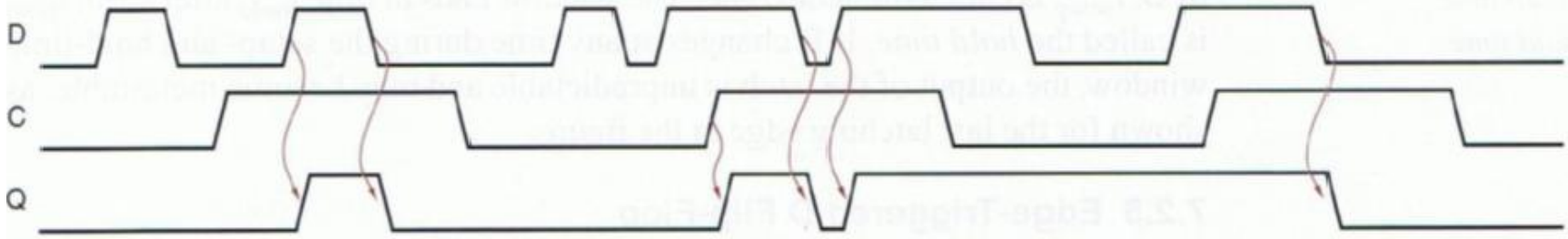

Figure 7-13 Functional behavior of a D latch for various inputs.

D Latch
(State Diagram and Characteristic Equation)

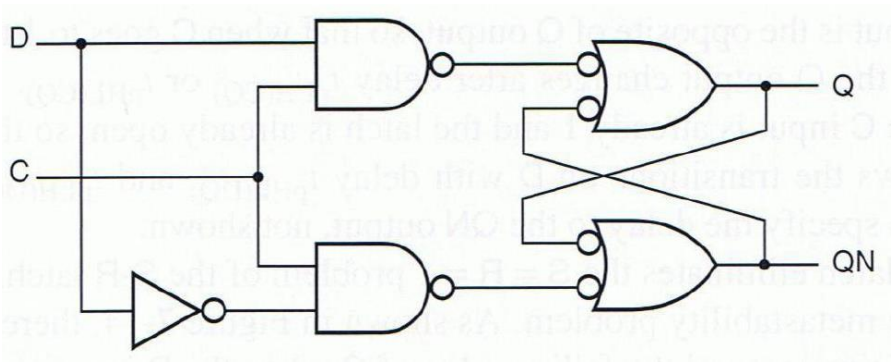

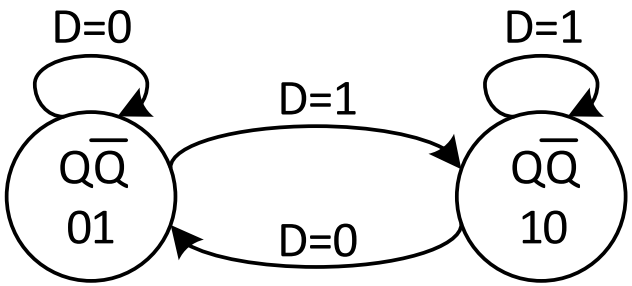

Q \ D	0	1
0	0	1
1	0	1

$Q^{+} = D$

D Latch (Timing Parameters)

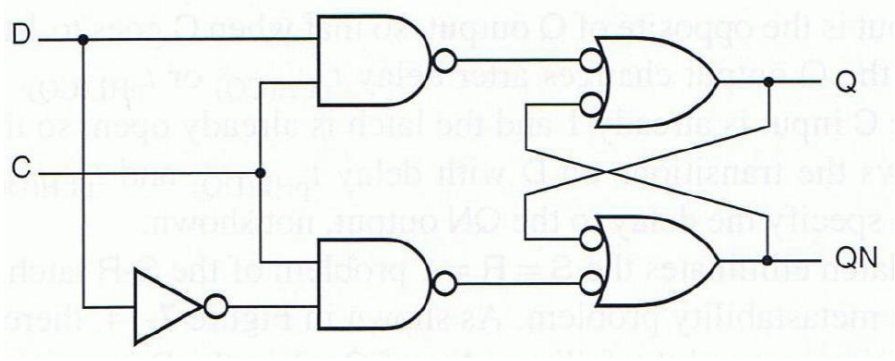

- t_{pLH} – propagation time LOW-to-HIGH
- t_{pHL} – propagation time HIGH-to-LOW
- t_{setup} – setup time
- t_{hold} – hold time

Non-determinism/metastability due to violation of t_{setup} and/or t_{hold}

Figure 7-14 Timing parameters for a D latch.

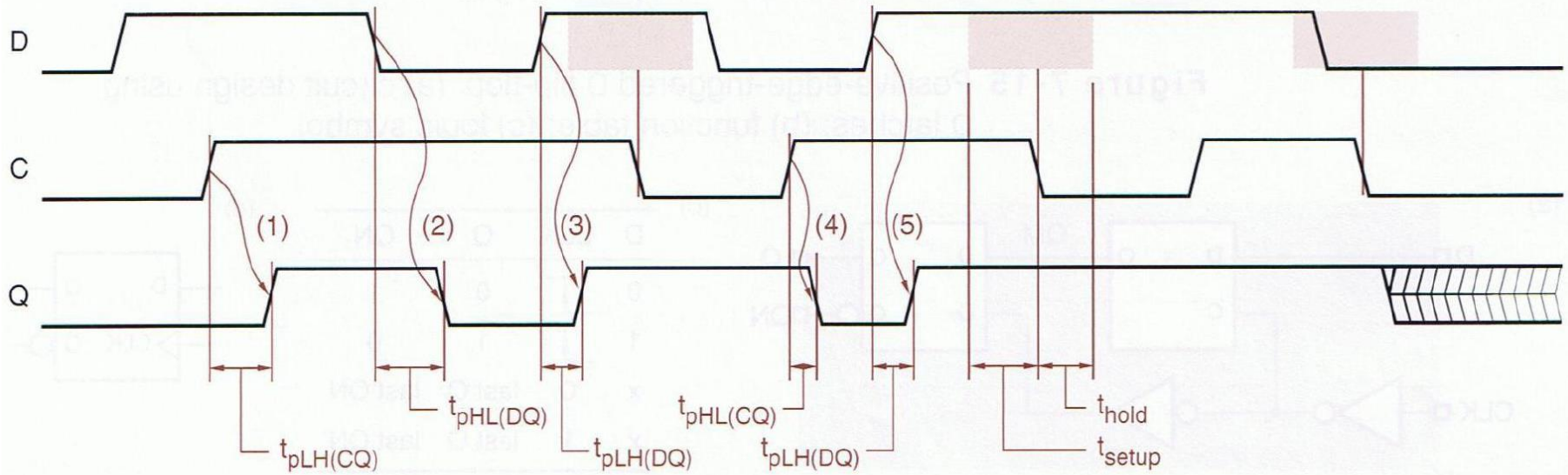

Delay propagations effects

- Propagation delays have a significant impact on digital systems.
  - Since the effective delay of a logic gate is variable, it is unacceptable to build circuits whose operation depends on the unpredictability of the delays imposed by each logic gate in the circuit.
  - In addition to this variability in propagation times, in most circuits it is very difficult to accurately predict propagation times in order to activate enable signals after the logic circuits that provide them with input values, coming from combinatorial logic, have fully stabilized.
- Let´s see a simple example

The two inputs are fixed and only input A varies

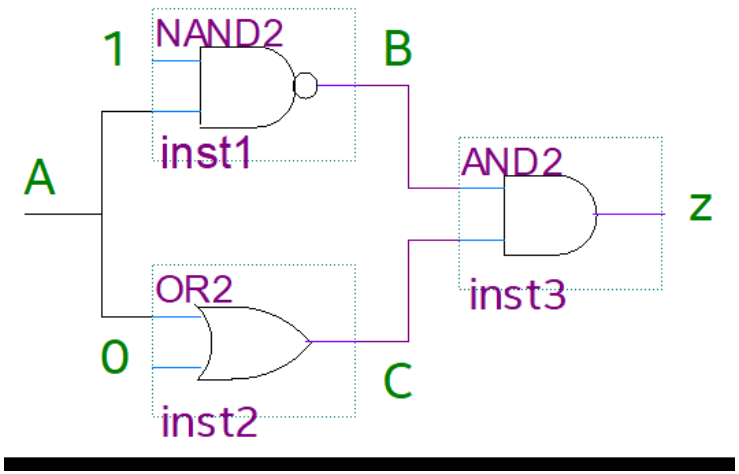

Delay propagations effects

- Consider that the propagation time of the NAND gate is greater than the time of the OR gate.
  - In this situation, signal C will change before signal B and there will be a small period of time during which both signals are at "1".
  - Since the output is generated by an AND gate, there is a pulse to "1" for a short time.
  - The output, despite the transition in signal A, is initially at "0" and ends at this same value, but passes transiently through "1"

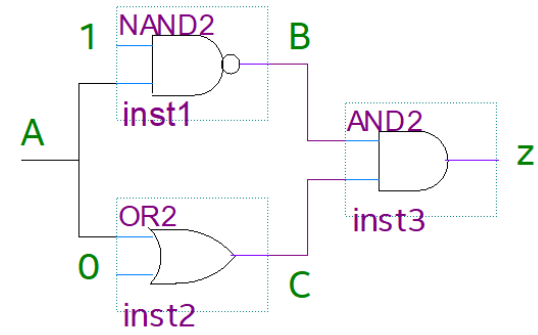

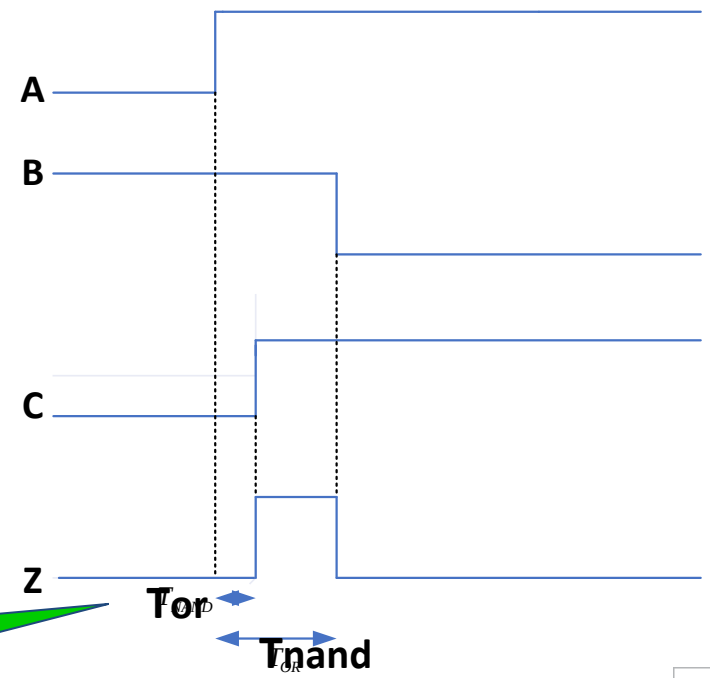

This type of situation is called a *hazard*

Delay propagations effects

- The influence of hazards on the operation of circuits is not particularly important, unless this erroneous value resulting from involuntary transition, is stored in a memory element such as a latch.
- Having analyzed the difficulty in predicting the time required for the stabilization of input signals for memory elements and given that it is absolutely essential to store the correct signals and not values that correspond to involuntary transitions, a method is needed to avoid this problem.
- Therefore, it is absolutely essential that memory elements have an enable input that controls when data is recorded in the memory elements.
  - This signal works like a clock signal!

Note: This is the basis of the synchronous operation of the circuits, which allows controlling the progress of information between the different elements that make up the system.
A synchronous system is defined as a system that operates according to the same clock signal.

A Feasible Solution

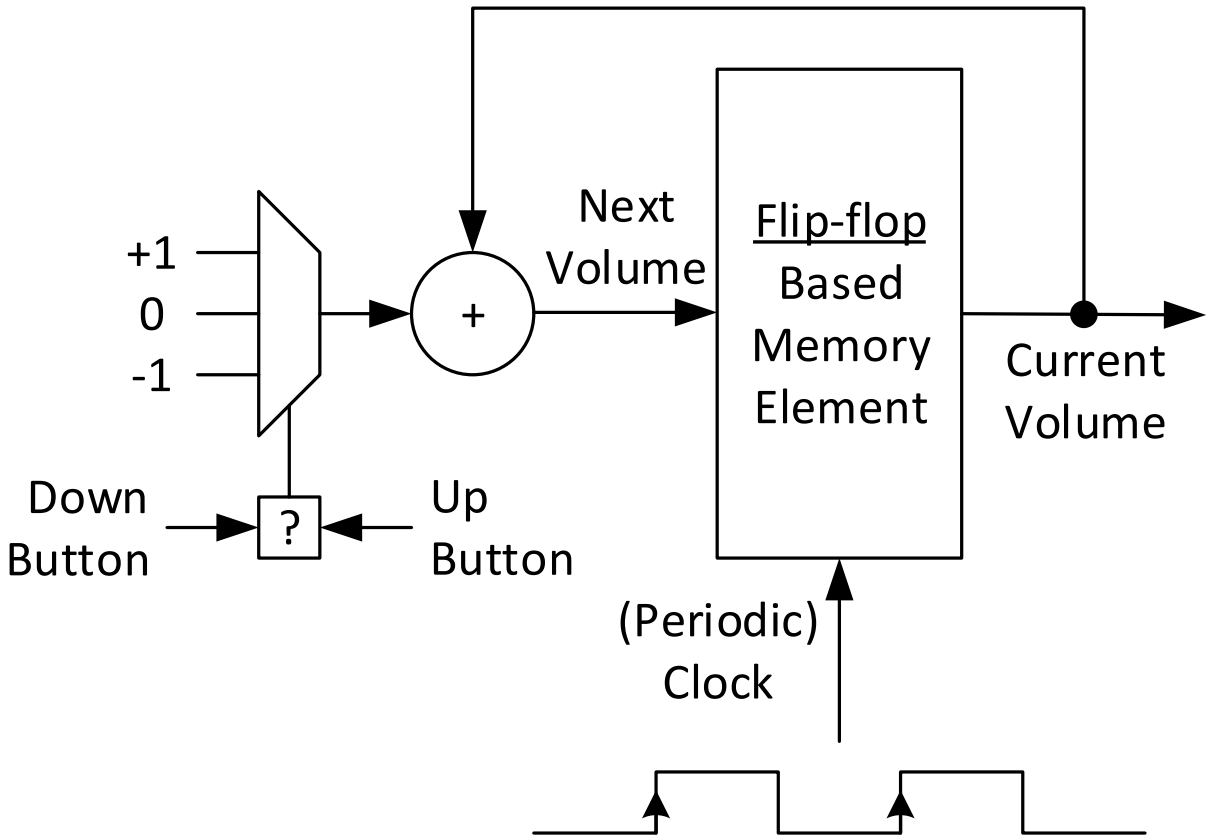

Periodic updates triggered by one of the edges (rising or falling) of a clock signal

Positive-edge-triggered D Flip-flop

- Latches are not used frequently but are a building block for flip-flops

Figure 7-15 Positive-edge-triggered D flip-flop: (a) circuit design using D latches; (b) function table; (c) logic symbol.

(a)

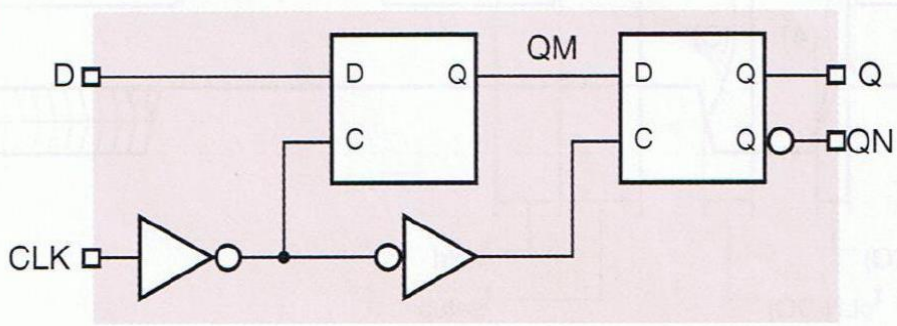

(b)

D	CLK	Q	QN
0	↑	0	1
1	↑	1	0
x	0	last Q	last QN
x	1	last Q	last QN

(c)

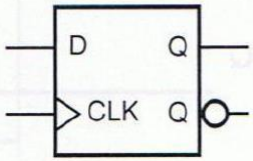

Positive-edge-triggered D Flip-flop (Functional Behavior / Operation)

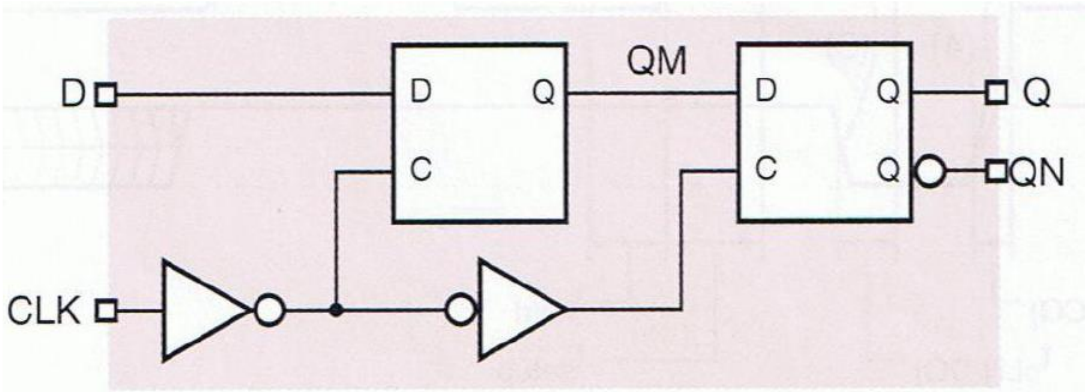

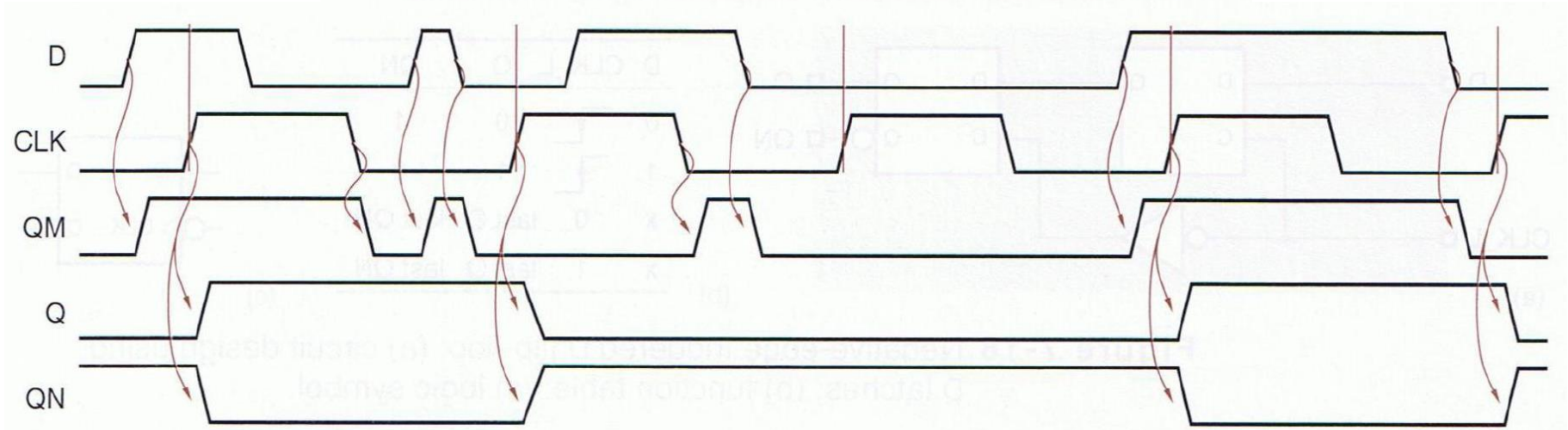

Figure 7-16 Functional behavior of a positive-edge-triggered D flip-flop.

Timing parameters

- Tsetup
  - is the minimum time that the input must be stabilized before the clock signal transition
- Thold
  - is the minimum time that the input must remain at the same value, after the clock signal transition
- $T_{p,LH}$ ->propagation time LOW-to-HIGH
  - is the propagation time required for a change in the output from low to high level
- $T_{p,HL}$ ->propagation time HIGH-to-LOW
  - is the propagation time required for a change in the output from high to low level

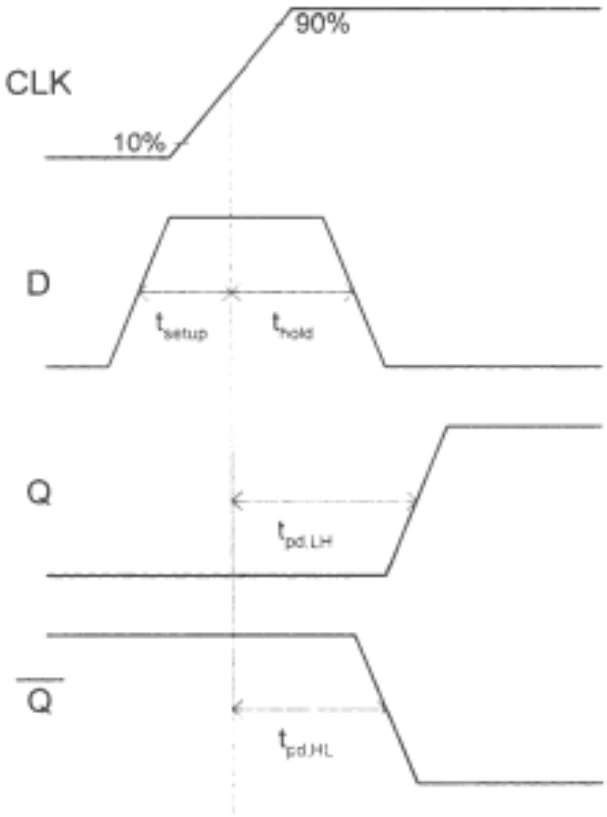

Positive-edge-triggered D Flip-flop (Timing Behavior)

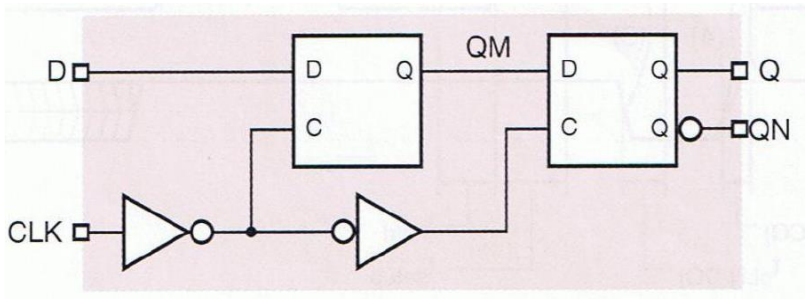

- t_{pLH} – propagation time LOW-to-HIGH
- t_{pHL} – propagation time HIGH-to-LOW
- t_{setup} – setup time
- t_{hold} – hold time

Figure 7-17 Timing behavior of a positive-edge-triggered D flip-flop.

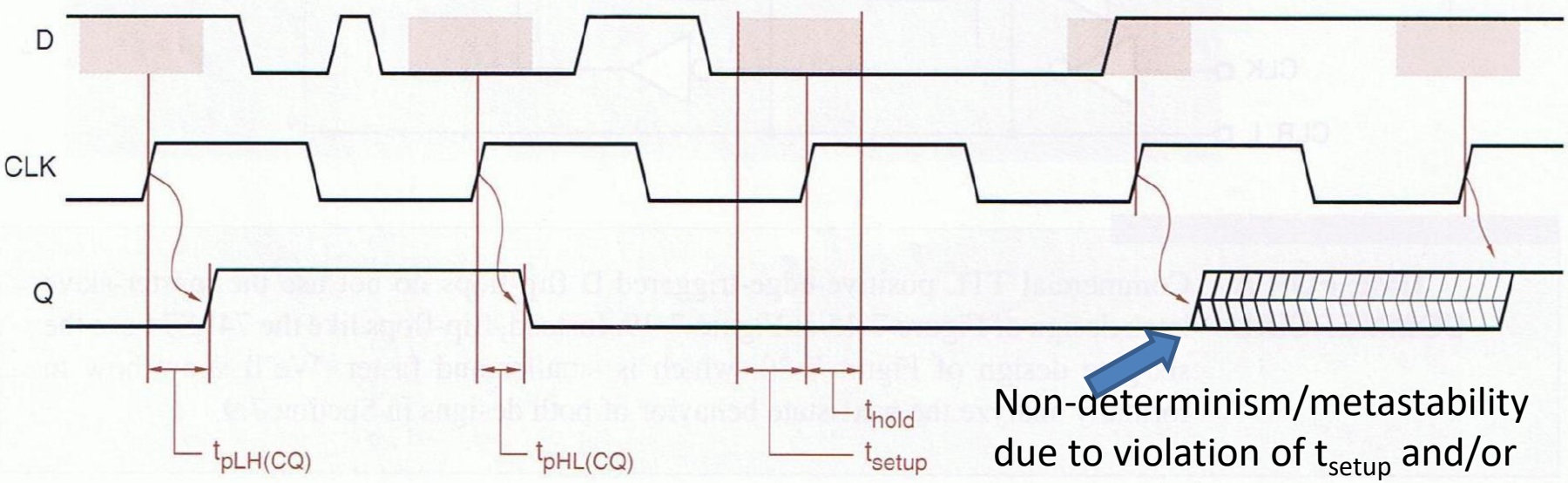

Non-determinism/metastability due to violation of t_{setup} and/or t_{hold}

Negative-edge-triggered D Flip-flop

- A negative-edge-triggered D flip-flop simply inverts the clock input, so that all the actions take place on the falling edge of the clock.
  - By convention a falling-edge trigger is considered to be active low.

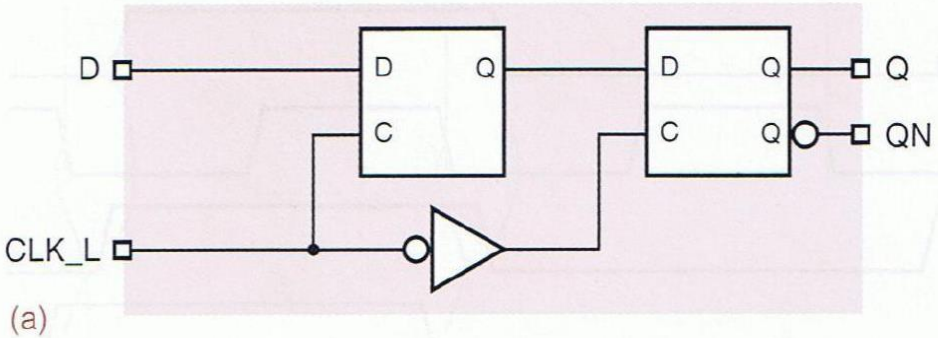

D	CLK_L	Q	QN
0	↓	0	1
1	↓	1	0
x	0	last Q	last QN
x	1	last Q	last QN

(b)

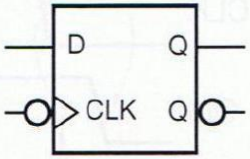

Figure 7-18 Negative-edge triggered D flip-flop: (a) circuit design using D latches; (b) function table; (c) logic symbol.

Positive-edge-triggered D Flip-flop with Preset and Clear

- Some D flip-flops have asynchronous inputs that may be used to force the flip-flop to a particular state independent of the CLK and D inputs. These inputs typically labeled PR (preset) and CLR (clear).

Figure 7-19 Positive-edge-triggered D flip-flop with preset and clear: (a) logic symbol; (b) circuit design using NAND gates.

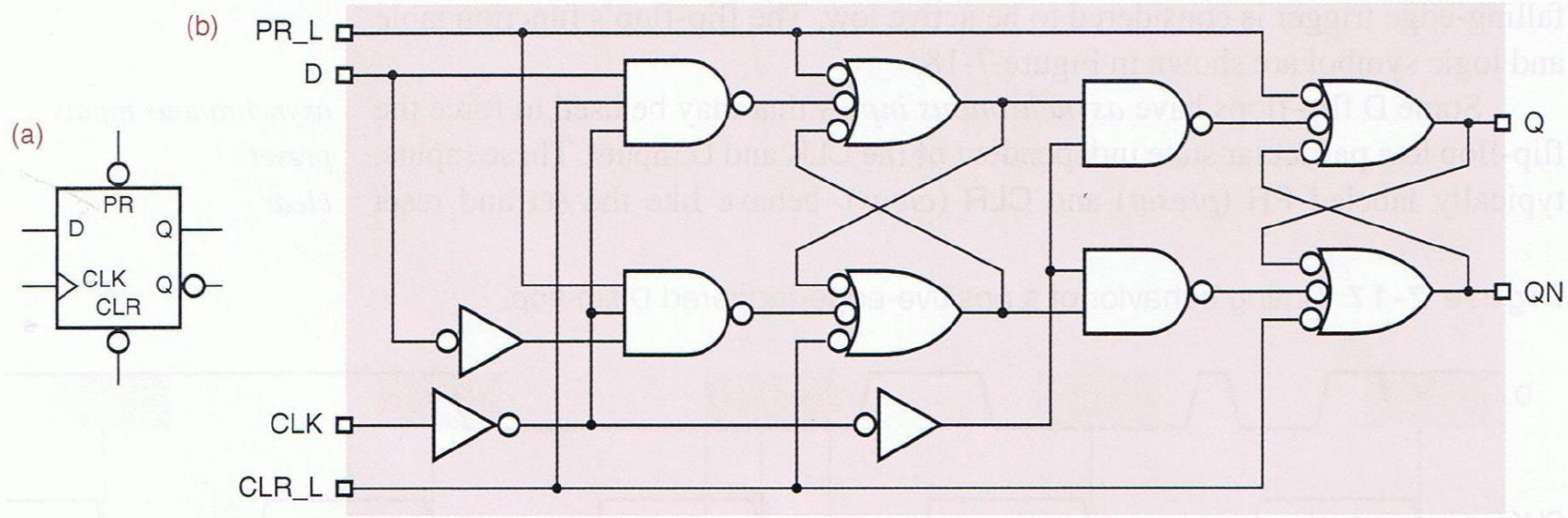

Positive-edge-triggered D Flip-flop (7474 Commercial Integrated Circuit)

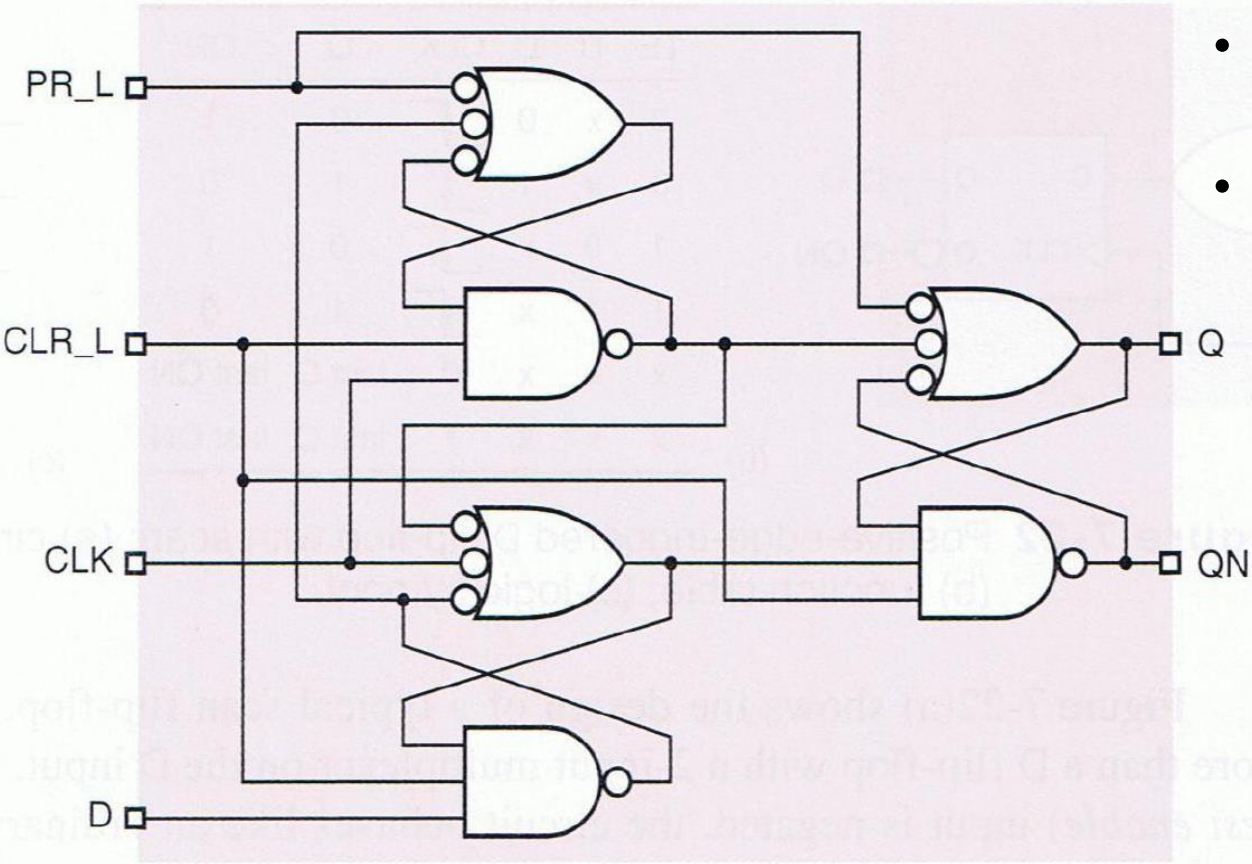

- 6 gates instead of 8 gates + inverters
- To be analyzed later…

Figure 7-20
Commercial circuit for a positive-edge-triggered D flip-flop such as 74LS74.

Positive-edge-triggered D Flip-flop with Enable

- A commonly desired function in D FF is the ability to hold the last value stored, rather than load a new value, at the CLK edge. This is done by adding an enable input, usually called EN.

Figure 7-21 Positive-edge-triggered D flip-flop with enable: (a) circuit design; (b) function table; (c) logic symbol.

(a)

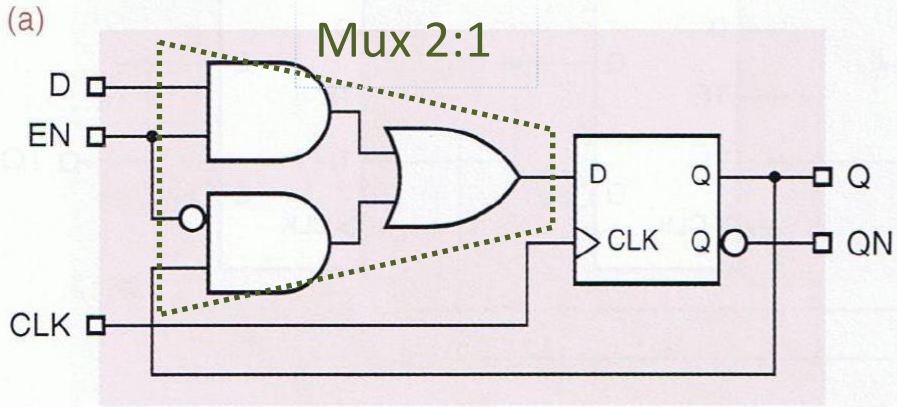

(b)

D	EN	CLK	Q	QN
0	1	↑	0	1
1	1	↑	1	0
x	0	↑	last Q	last QN
x	x	0	last Q	last QN
x	x	1	last Q	last QN

(c)

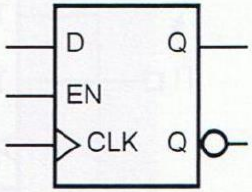

Conclusion

- At the end of this lecture and corresponding lab, it is fundamental to know and understand the structure, operation and timing behavior of basic sequential logic circuits (latches and flip-flops)
- Plan for the next lectures
  - Analysis of sequential circuits (Finite State Machines) and timing aspects
  - Synthesis of sequential circuits (Finite State Machines)
  - Standard sequential circuits
    - Registers and shift registers
    - Counters

Reading chapter 7 (4th ed.) or chapter 10 (5th ed.) of *John F. Wakerly, "Digital Design – Principles and Practices", Pearson – Prentice Hall*, is highly recommended.